VALVES AND SOLENOID VALVES
SERIES 4

3/2, 5/2 and 5/3-way CC, CO
Ports: G1/8, G1/4, G3/8, G1/2

- The different ports allow flows from 650 to 4000 Nl/min
- New models available: with G3/8 ports and 1800 Nl/min flow

Series 4 solenoid valves have been designed in the 3/2, 5/2, 5/3 versions and with the following two devices of actuation:
- electropneumatically actuated with mechanical spring return
- electropneumatically actuated and return with external and internal air pressure supply

Series 4 valves are equipped with a manual override which allows a stable operation and they are particularly suitable for mounting in arduous conditions.

All these valves can be operated by solenoids Series U, G A8 and H8.

Pneumatically actuated valves 3/2 NC become NO when the supply is on connection 3.

General Data

Construction	Balanced spool type
Valve functions	3/2 - 5/2 - 5/3-way CC, CO
Materials	AL body and subbases Stainless steel spool Technopolymer end cover NBR PU seals
Ports	G1/8 - G1/4 - G3/8 - G1/2
Installation	In any position
Operating temperature	0 ÷ 60°C (with dry air at -20°C)
Operating pressure	See table
Medium	Filtered air, without lubrication. If lubricated air is used, it is recommended to use ISOVG32 oil. Once applied the lubrication should never be interrupted.

Products designed for industrial applications. General terms and conditions for sale are available on www.camozzi.com
This document contains a description of the products offered by Camozzi Automation at time of publication.
For more complete and up to date information about the Camozzi Automation product range, please refer to our online catalogue at https://shop.camozzi.com

Coding Example

4	5	4	-	015	-	22	IL	-	U7	7

4	SERIES
5	NUMBER OF WAYS - POSITIONS 3 = 3/2 NC 4 = 3/2 NO 5 = 5/2 6 = 5/3 CC 7 = 5/3 CO 8 = 5/3 CP (only for G1/4, G1/8 ports)
4	PORTS 2C = G1/2 2N = G1/2 (high flow) 3 = G3/8 4 = G1/4 8 = G1/8
015	ACTUATION 011 = Double solenoid (horizontal solenoids) V11 = Double solenoid (vertical solenoids) for G1/4 port only E11 = Double solenoid external servo-command E15 = Single solenoid external servo-command 015 = Single solenoid, spring return (horizontal solenoids) V15 = Single solenoid, spring return (vertical solenoid) for G1/4 port only 016 = Single solenoid, pneumatic spring return (horizontal solenoid) V16 = Single solenoid, pneumatic spring return (vertical solenoid) for G1/4 port only 33 = Pneumatic pneumatic 34 = Pneumatic differential 35 = Pneumatic spring
22	SOLENOID INTERFACE 22 = Mech. sol. 22 x 22 50 = Mech. sol. 32 x 32 (only for 452C version)
IL	TYPE OF MANUAL OVERRIDE = Bistable, standard IL = Bistable, lever type (available on demand) IM = Monostable (available on demand)
U7	ENCAPSULATING MATERIAL / SOLENOID DIMENSIONS A6 = PPS / 32 x 32 (only for 452C version) A8 = PPS / 30 x 30 G7 = PA / 22 x 22 G8 = PA / 30 x 30 (24 V DC only) G9 = PA / 22 x 58 H8 = PA 6 V0 / 30 x 30 U7 = PET / 22 x 22
7	SOLENOID VOLTAGE Check the available solenoid voltages in the accessory tables

Types of manual override

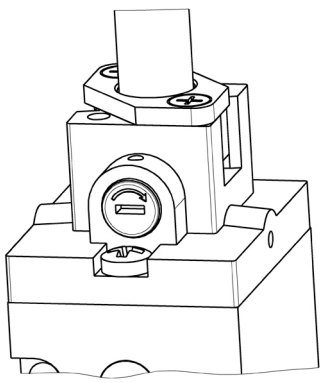

Example of solenoid valve with a bistable standard manual override.

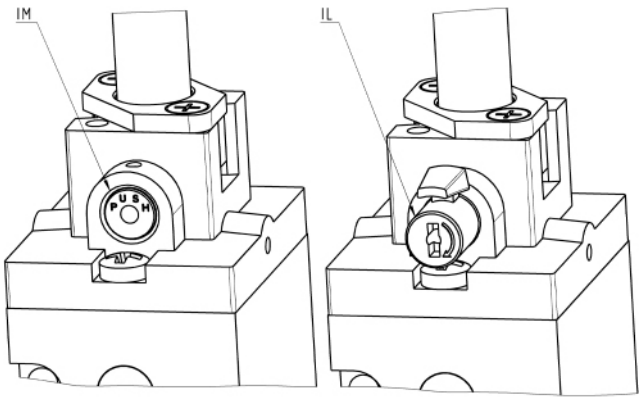

Example of solenoid monostable valve (IM) and bistable valve with a lever type manual override (IL).

Products designed for industrial applications. General terms and conditions for sale are available on www.camozzi.com
This document contains a description of the products offered by Camozzi Automation at time of publication.
For more complete and up to date information about the Camozzi Automation product range, please refer to our online catalogue at https://shop.camozzi.com

3/2-way solenoid valve G1/8, monostable - Mod. 438... and 448...

These solenoid valves, which have electropneumatic actuation and spring return, are available in the NC (closed) or NO (open) version.

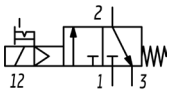

EV10

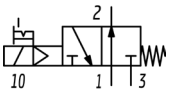

EV12

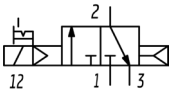

EV16

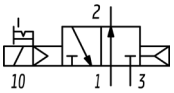

EV17

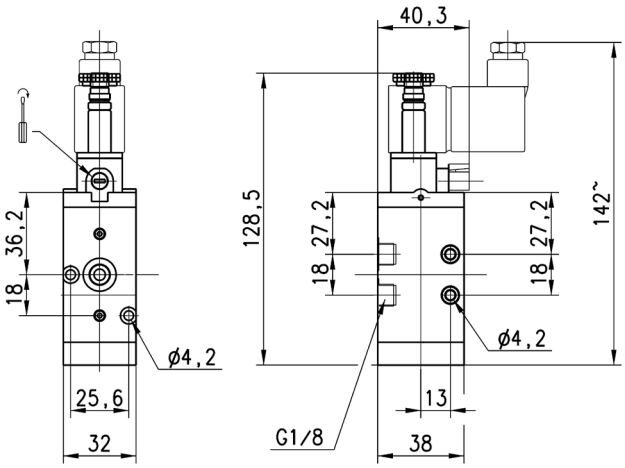

Mod.	Function	Flow rate Qn [Nl/min]	Operating pressure [bar]	Symbol
438-015-22	3/2 NC	650	2,5 ÷ 10	EV10
438-016-22	3/2 NC	650	2,5 ÷ 10	EV16
448-015-22	3/2 NO	650	2,5 ÷ 10	EV12
448-016-22	3/2 NO	650	2,5 ÷ 10	EV17

3/2-way solenoid valve G1/8, bistable - Mod. 438-011...

These solenoid valves, which have electropneumatic actuation and return, assume the NC (closed) or NO (open) operating status depending on the last pulse received.

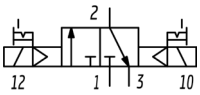

EV14

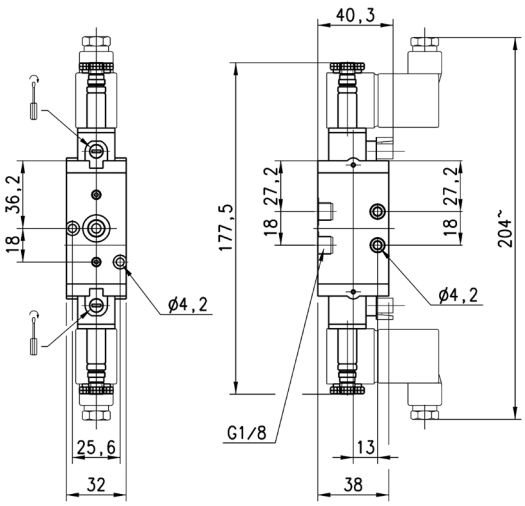

Mod.	Function	Flow rate Qn [Nl/min]	Operating pressure [bar]
438-011-22	3/2	650	2 ÷ 10

5/2-way solenoid valves, G1/8, monostable - Mod. 458...

These solenoid valves, which have electropneumatic actuation and spring return, are suitable for operating double-acting cylinders.

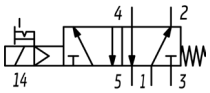

EV18

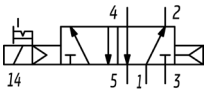

EV20

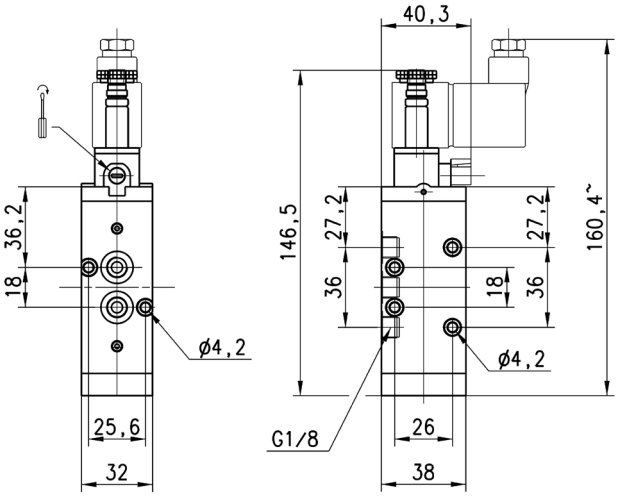

Mod.	Function	Flow rate Qn [Nl/min]	Operating pressure [bar]	Symbol
458-015-22	5/2	650	2,5 ÷ 10	EV18
458-016-22	5/2	650	2,5 ÷ 10	EV20
458-015-22IL	5/2	650	2,5 ÷ 10	EV18

5/2-way solenoid valves, G1/8, bistable - Mod. 458-011...

These solenoid valves, with electropneumatic actuation and return, are suitable for operating double-acting cylinders.

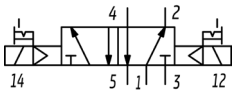

EV23

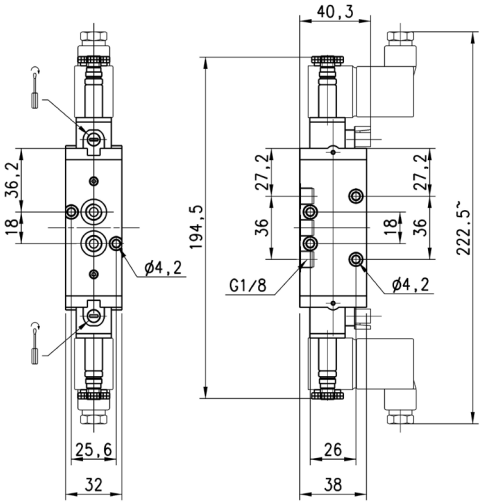

Mod.	Function	Flow rate Qn [Nl/min]	Operating pressure [bar]
458-011-22	5/2	650	2 ÷ 10

Products designed for industrial applications. General terms and conditions for sale are available on www.camozzi.com
This document contains a description of the products offered by Camozzi Automation at time of publication.
For more complete and up to date information about the Camozzi Automation product range, please refer to our online catalogue at https://shop.camozzi.com

5/3-way solenoid valve, G1/8 - Mod. 468-011... and 478-011...

CC = Centres Closed
CO = Centres Open

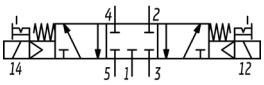

EV28

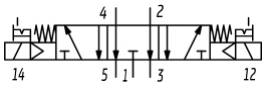

EV32

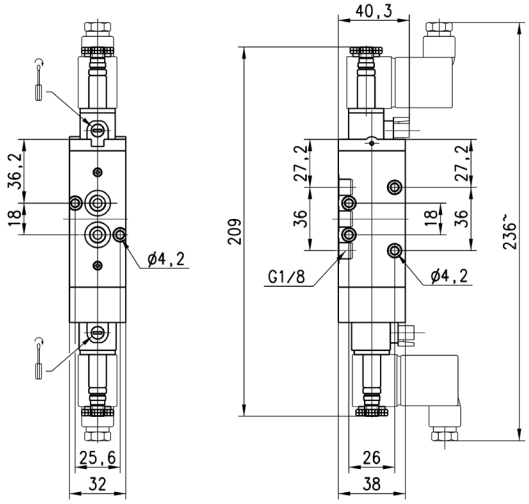

Mod.	Function	Flow rate Qn [Nl/min]	Operating pressure [bar]	Symbol
468-011-22	5/3 CC	600	2,5 ÷ 10	EV28
478-011-22	5/3 CO	600	2,5 ÷ 10	EV32

3/2-way solenoid valve, G1/4, monostable - Mod. 434 and Mod. 444

These solenoid valves, which have electropneumatic actuation and spring return, are available in the NC (closed) or NO (open) version.

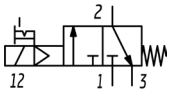

EV10

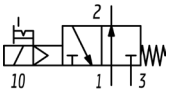

EV12

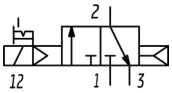

EV16

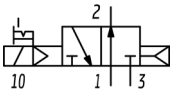

EV17

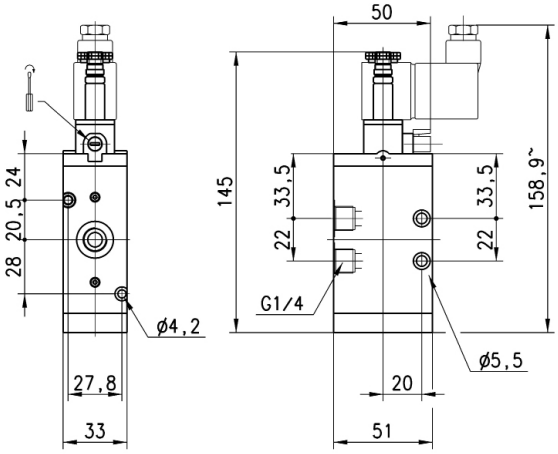

Mod.	Function	Flow rate Qn [Nl/min]	Operating pressure [bar]	Symbol
434-015-22	3/2 NC	1250	2,5 ÷ 10	EV10
434-016-22	3/2 NC	1250	2,5 ÷ 10	EV16
444-015-22	3/2 NO	1250	2,5 ÷ 10	EV12
444-016-22	3/2 NO	1250	2,5 ÷ 10	EV17
434-015-22IL	3/2 NC	1250	2,5 ÷ 10	EV10

Products designed for industrial applications. General terms and conditions for sale are available on www.camozzi.com
This document contains a description of the products offered by Camozzi Automation at time of publication.
For more complete and up to date information about the Camozzi Automation product range, please refer to our online catalogue at https://shop.camozzi.com

3/2-way solenoid valve, G1/4, bistable - Mod. 434-011...

These solenoid valves, which have electropneumatic actuation and return, assume the NC (closed) or NO (open) position depending on the last pulse received.

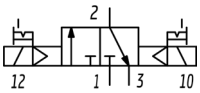

EV14

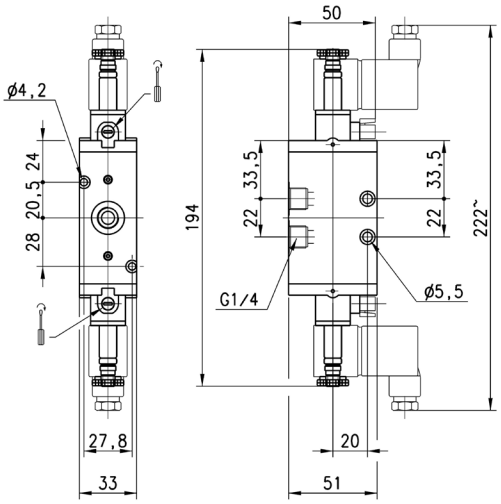

Mod.	Function	Flow rate Qn [Nl/min]	Operating pressure [bar]
434-011-22	3/2	1250	2 ÷ 10

5/2-way solenoid valve, G1/4, monostable - Mod. 454...

These solenoid valves, which have electropneumatic actuation and spring return, are suitable for operating double-acting cylinders.

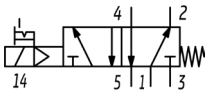

EV18

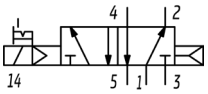

EV20

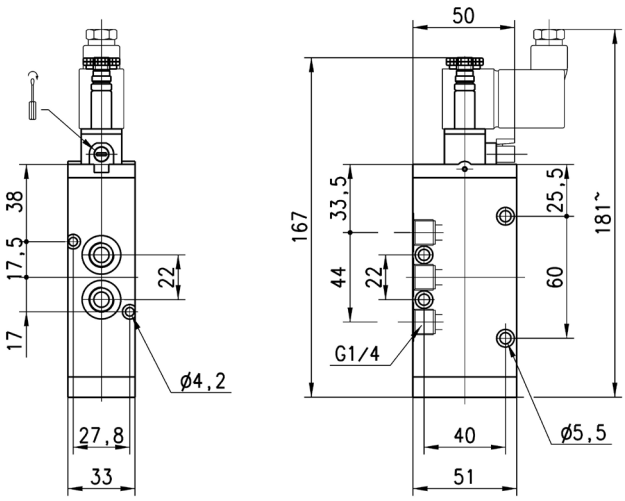

Mod.	Function	Flow rate Qn [Nl/min]	Operating pressure [bar]	Symbol
454-015-22	5/2	1250	2,5 ÷ 10	EV18
454-016-22	5/2	1250	2,5 ÷ 10	EV20

Products designed for industrial applications. General terms and conditions for sale are available on www.camozzi.com
This document contains a description of the products offered by Camozzi Automation at time of publication.
For more complete and up to date information about the Camozzi Automation product range, please refer to our online catalogue at https://shop.camozzi.com

5/2-way solenoid valve, G1/4, bistable - Mod. 454-011...

These solenoid valves, which have electropneumatic actuation and return, are suitable for operating double-acting cylinders.

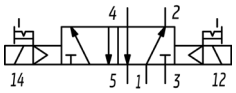

EV23

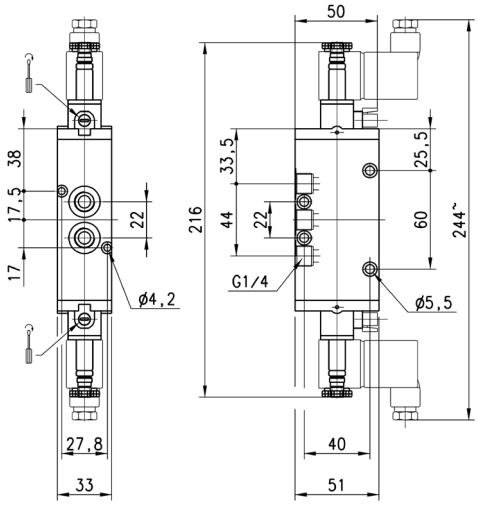

Mod.	Function	Flow rate Qn [Nl/min]	Operating pressure [bar]
454-011-22	5/2	1250	2 ÷ 10
454-011-22IL	5/2	1250	2 ÷ 10

5/2-way solenoid valve, G1/4, monostable - Mod. 454-V...

These solenoid valves, which have electropneumatic actuation and spring or pneumatic spring return are suitable for operating double-acting cylinders.

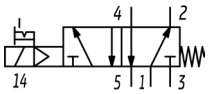

EV18

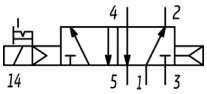

EV20

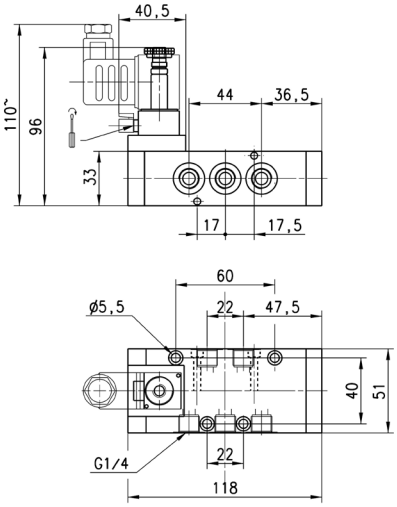

Mod.	Function	Flow rate Qn [Nl/min]	Operating pressure [bar]	Symbol
454-V15-22	5/2	1250	2,5 ÷ 10	EV18
454-V16-22	5/2	1250	2,5 ÷ 10	EV20

Products designed for industrial applications. General terms and conditions for sale are available on www.camozzi.com
This document contains a description of the products offered by Camozzi Automation at time of publication.
For more complete and up to date information about the Camozzi Automation product range, please refer to our online catalogue at https://shop.camozzi.com

5/2-way solenoid valve, G1/4, bistable - Mod. 454-V11...

These solenoid valves, which have electropneumatic actuation and return, are suitable for operating double-acting cylinders.

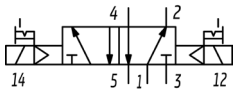

EV23

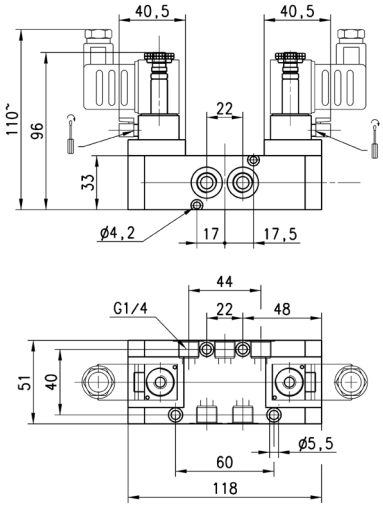

Mod.	Function	Flow rate Qn [Nl/min]	Operating pressure [bar]
454-V11-22	5/2	1250	2 ÷ 10

5/3-way solenoid valve, G1/4 - Mod. 464-011... and 474-011...

CC = Centres Closed
CO = Centres Open

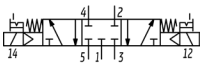

EV28

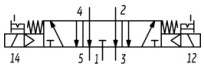

EV32

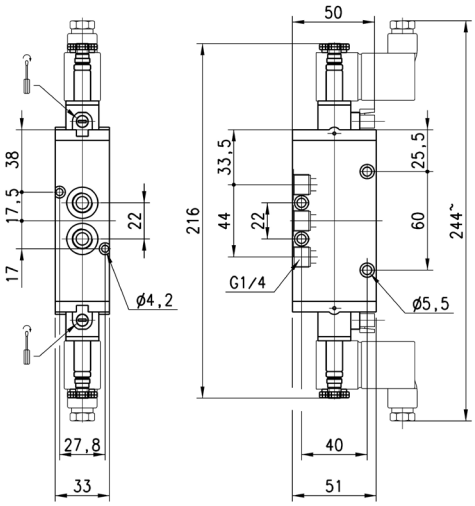

Mod.	Function	Flow rate Qn [Nl/min]	Operating pressure [bar]	Symbol
464-011-22	5/3 CC	1250	2,5 ÷ 10	EV28
474-011-22	5/3 CO	1250	2,5 ÷ 10	EV32

Products designed for industrial applications. General terms and conditions for sale are available on www.camozzi.com
This document contains a description of the products offered by Camozzi Automation at time of publication.
For more complete and up to date information about the Camozzi Automation product range, please refer to our online catalogue at https://shop.camozzi.com

3/2-way solenoid valve, G3/8, monostable Mod. 433... and Mod. 443...

These solenoid valves, which have electropneumatic actuation and spring return, are available in the NC (closed) or NO (open) version.
The E15 version can work both NC and NO.

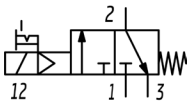

EV10

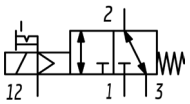

EV11

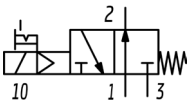

EV12

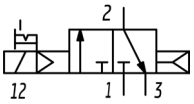

EV16

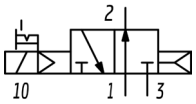

EV17

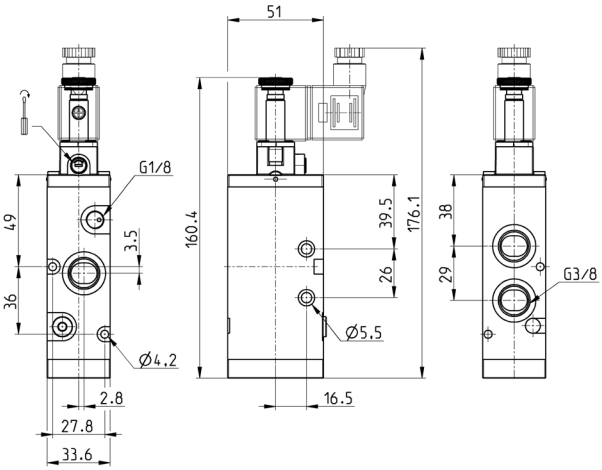

Mod.	Function	Flow Qn [Nl/min]	Working pressure [bar]	Min pilot pressure [bar]	Symbol
433-015-22	3/2 NC	1800	2,5 ÷ 10	-	EV10
433-E15-22	3/2	1800	-0,9 ÷ 10	2,5	EV11
433-016-22	3/2 NC	1800	2,5 ÷ 10	-	EV16
443-015-22	3/2 NO	1800	2,5 ÷ 10	-	EV12
443-016-22	3/2 NO	1800	2,5 ÷ 10	-	EV17

3/2-way solenoid valve, G3/8, bistable - Mod. 433...

These solenoid valves, which have electropneumatic actuation and return, assume the NC (closed) or NO (open) position depending on the last pulse received.
The E11 version can work both NC and NO.

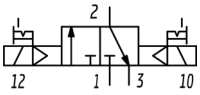

EV14

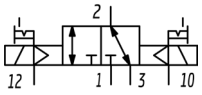

EV15

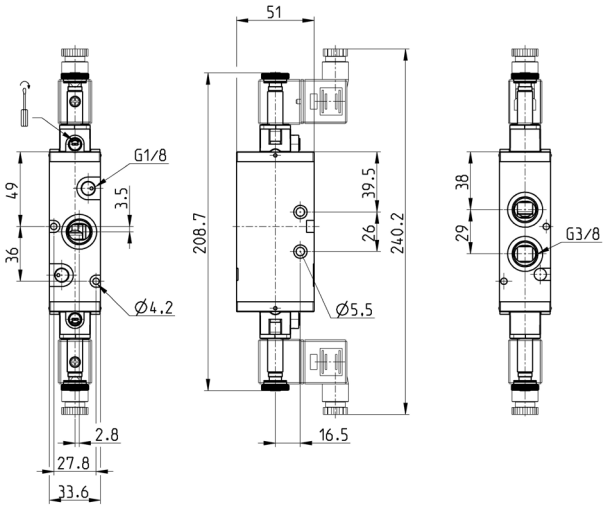

Mod.	Function	Flow Qn [Nl/min]	Working pressure [bar]	Min pilot pressure [bar]	Symbol
433-011-22	3/2	1800	2 ÷ 10	-	EV14
433-E11-22	3/2	1800	-0,9 ÷ 10	2	EV15

5/2-way solenoid valve, G3/8, monostable - Mod. 453...

These solenoid valves, which have electropneumatic actuation and spring return, are suitable for operating double-acting cylinders.

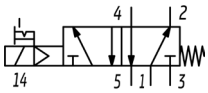

EV18

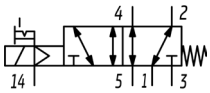

EV19

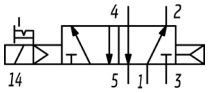

EV20

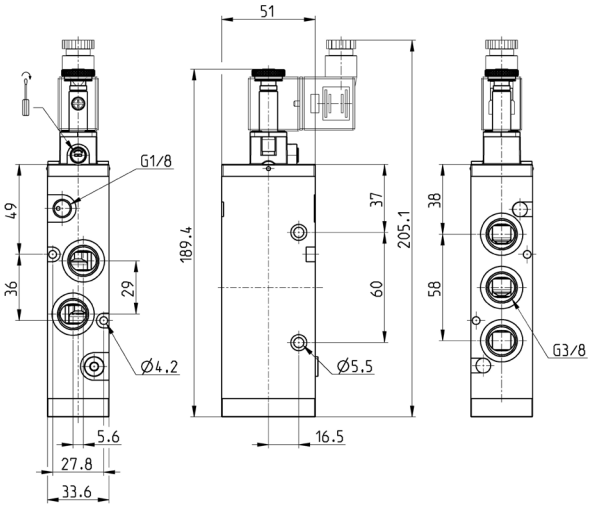

Mod.	Function	Flow Qn [Nl/min]	Working pressure [bar]	Min pilot pressure [bar]	Symbol
453-015-22	5/2	1800	2,5 ÷ 10	-	EV18
453-E15-22	5/2	1800	-0,9 ÷ 10	2,5	EV19
453-016-22	5/2	1800	2,5 ÷ 10	-	EV20

5/2-way solenoid valve, G3/8, bistable - Mod. 453...

These solenoid valves, which have electropneumatic actuation and return, are suitable for operating double-acting cylinders.

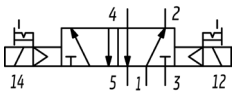

EV23

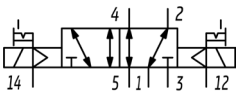

EV25

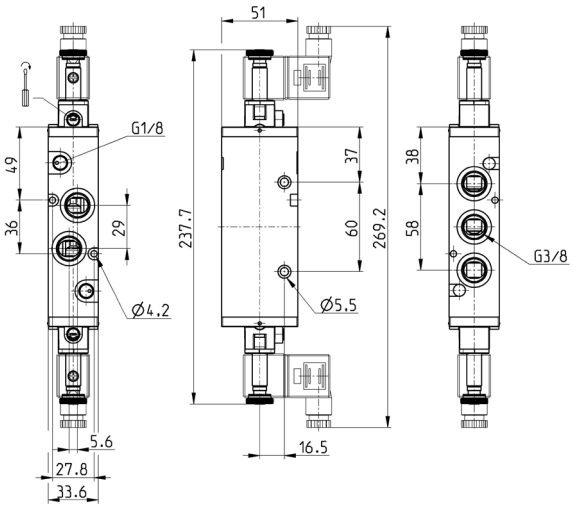

Mod.	Function	Flow Qn [Nl/min]	Working pressure [bar]	Min pilot pressure [bar]	Symbol
453-011-22	5/2	1800	2 ÷ 10	-	EV23
453-E11-22	5/2	1800	-0,9 ÷ 10	2	EV25

Products designed for industrial applications. General terms and conditions for sale are available on www.camozzi.com
This document contains a description of the products offered by Camozzi Automation at time of publication.
For more complete and up to date information about the Camozzi Automation product range, please refer to our online catalogue at https://shop.camozzi.com

5/3-way solenoid valve, G3/8 - Mod. 463-... and 473-...

CC = Centres Closed
CO = Centres Open

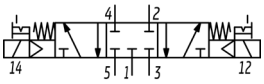

EV28

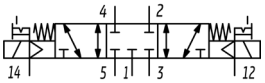

EV29

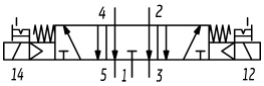

EV32

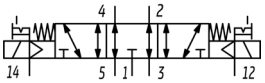

EV34

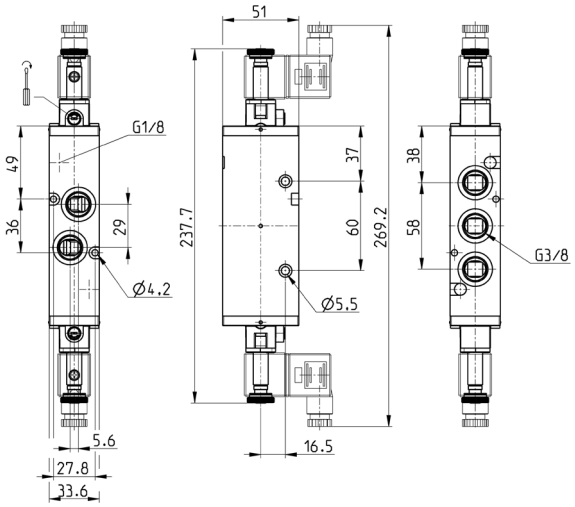

Mod.	Function	Flow Qn [Nl/min]	Working pressure [bar]	Min pilot pressure [bar]	Symbol
463-011-22	5/3 CC	1600	2,5 ÷ 10	-	EV28
463-E11-22	5/3 CC	1600	-0,9 ÷ 10	2,5	EV29
473-011-22	5/3 CO	1600	2,5 ÷ 10	-	EV32
473-E11-22	5/3 CO	1600	-0,9 ÷ 10	2,5	EV34

5/2-way solenoid valve, G1/2, monostable - Mod. 452C...

These solenoid valves, which have electropneumatic actuation and spring or pneumatic spring return are suitable for operating double-acting cylinders.

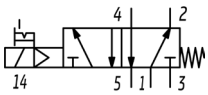

EV18

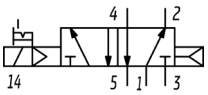

EV20

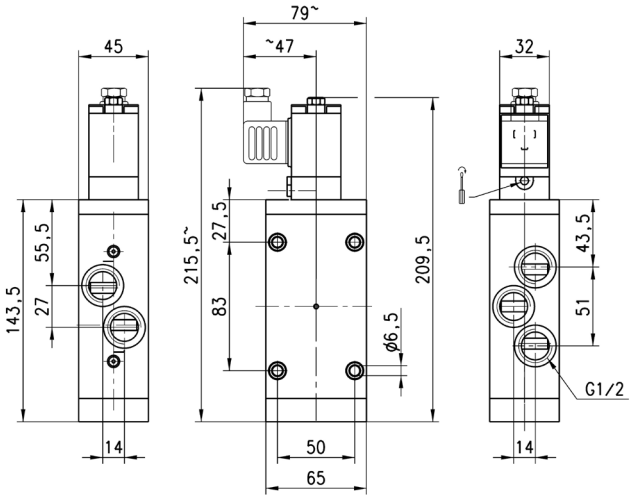

Mod.	Function	Flow rate Qn [Nl/min]	Operating pressure [bar]	Symbol
452C-015-50-A6	5/2	2500	2,5 ÷ 10	EV18
452C-016-50-A6	5/2	2500	2,5 ÷ 10	EV20
452C-015	5/2	2500	2,5 ÷ 10	
452C-015-22	5/2	2500	2,5 ÷ 10	
452C-016	5/2	2500	2,5 ÷ 10	

Products designed for industrial applications. General terms and conditions for sale are available on www.camozzi.com
This document contains a description of the products offered by Camozzi Automation at time of publication.
For more complete and up to date information about the Camozzi Automation product range, please refer to our online catalogue at https://shop.camozzi.com

5/2-way solenoid valve, G1/2, bistable - Mod. 452C-011...

These solenoid valves, which have electropneumatic actuation and return, are suitable for operating double-acting cylinders.

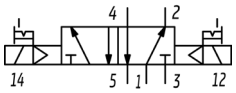

EV23

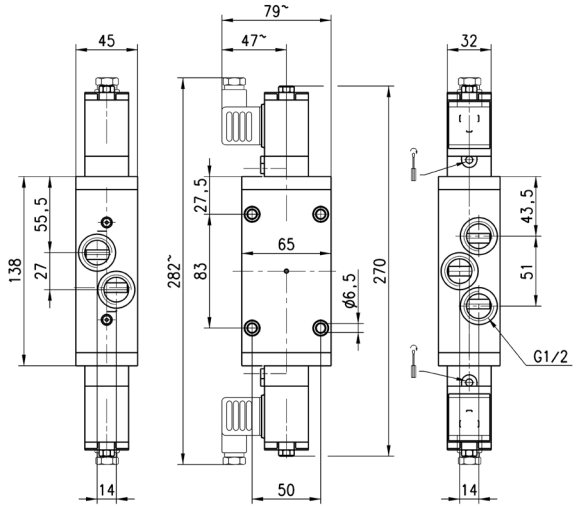

Mod.	Function	Flow rate Qn [Nl/min]	Operating pressure [bar]
452C-011-50-A6☆	5/2	2500	2 ÷ 10
452C-011-22	5/2	2500	2 ÷ 10
452C-011	5/2	2500	2 ÷ 10

5/2-way solenoid valve, G1/2, monostable - Mod. 452N-...

These solenoid valves, which have electropneumatic actuation and spring or pneumatic spring return are suitable for operating double-acting cylinders.

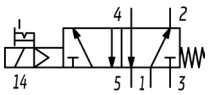

EV18

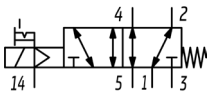

EV19

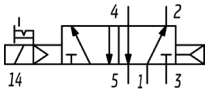

EV20

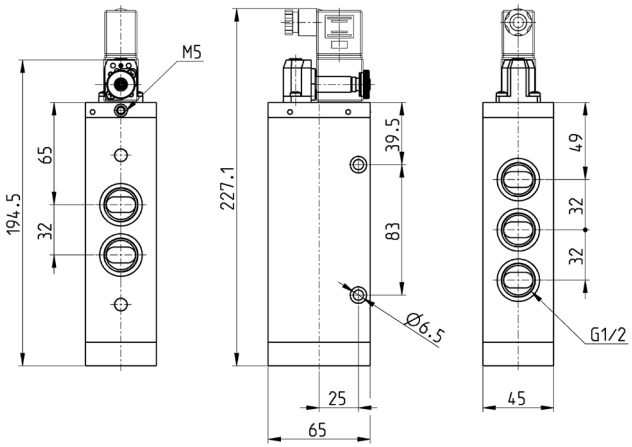

Mod.	Function	Flow rate Qn [Nl/min]	Min pilot pressure [bar]	Working pressure [bar]	Symbol
452N-015-22	5/2	4000	-	2,5 ÷ 10	EV18
452N-016-22	5/2	4000	-	2,5 ÷ 10	EV20
452N-E15-22	5/2	4000	2,5	-0,9 ÷ 10	EV19

Products designed for industrial applications. General terms and conditions for sale are available on www.camozzi.com
This document contains a description of the products offered by Camozzi Automation at time of publication.
For more complete and up to date information about the Camozzi Automation product range, please refer to our online catalogue at https://shop.camozzi.com

5/2-way solenoid valve, G1/2, bistable - Mod. 452N-...

These solenoid valves, which have electropneumatic actuation and return, are suitable for operating double-acting cylinders.

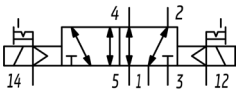

EV25

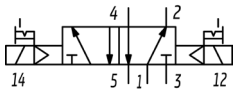

EV23

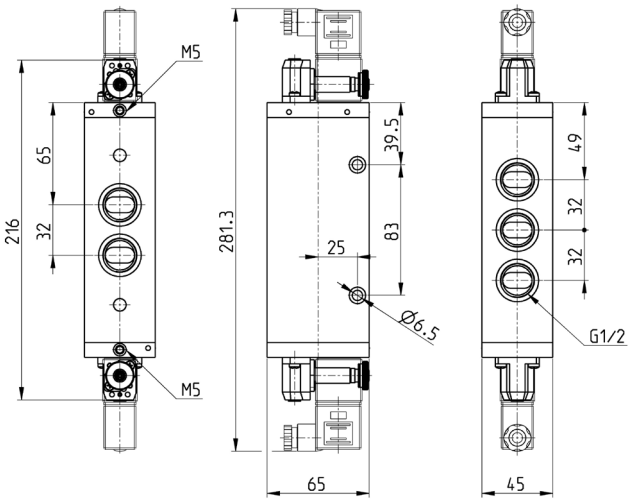

Mod.	Function	Flow rate Qn [Nl/min]	Min pilot pressure [bar]	Min pilot pressure [bar]	Symbol
452N-011-22	5/2	4000	-	2 ÷ 10	EV23
452N-E11-22	5/2	4000	2	-0,9 ÷ 10	EV25

5/3-way solenoid valve, G1/2, bistable - Mod. 462N-..., 472N-...

These solenoid valves, which have electropneumatic actuation and return, are suitable for operating double-acting cylinders.

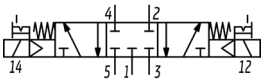

EV28

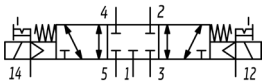

EV29

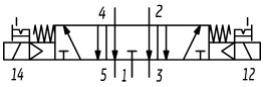

EV32

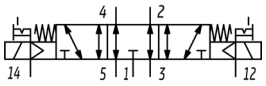

EV34

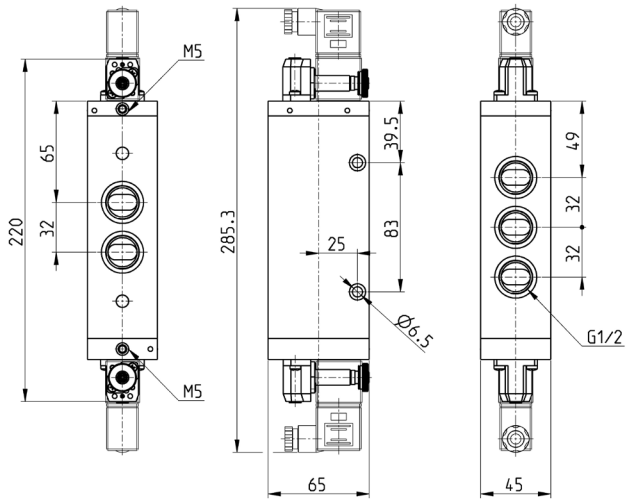

Mod.	Function	Flow rate Qn [Nl/min]	Min pilot pressure [bar]	Working pressure [bar]	Symbol
462N-011-22	5/3 CC	3300	-	2,5 ÷ 10	EV28
462N-E11-22	5/3 CC	3300	2,5	-0,9 ÷ 10	EV29
472N-011-22	5/3 CO	3300	-	2,5 ÷ 10	EV32
472N-E11-22	5/3 CO	3300	2,5	-0,9 ÷ 10	EV34

3/2-way valve, G1/8 port, monostable - Mod. 438-35

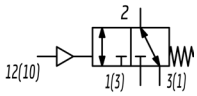

VP01

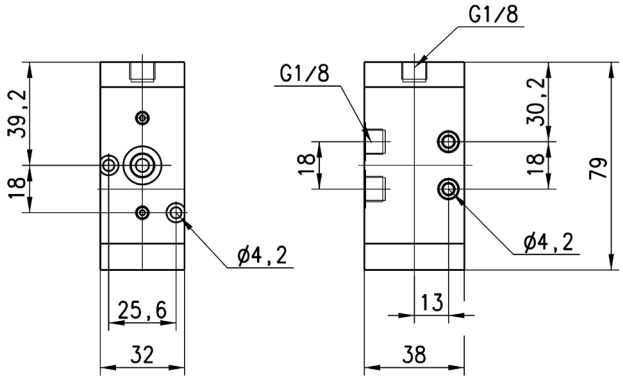

Mod.	Mounting	Function	Flow rate Qn [Nl/min]	Min pilot pressure [bar]	Working pressure [bar]
438-35	In-line/on manifold	3/2 NC	700	2,5	-0,9 ÷ 10

5/2-way valve, G1/8 port, monostable - Mod. 458-35

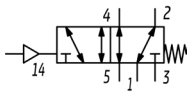

VP04

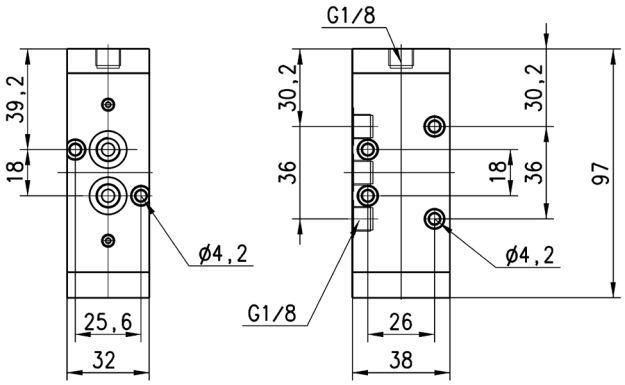

Mod.	Mounting	Function	Flow rate Qn [Nl/min]	Min pilot pressure [bar]	Working pressure [bar]
458-35	In-line/manifold	5/2	700	2,5	-0,9 ÷ 10

Products designed for industrial applications. General terms and conditions for sale are available on www.camozzi.com
This document contains a description of the products offered by Camozzi Automation at time of publication.
For more complete and up to date information about the Camozzi Automation product range, please refer to our online catalogue at https://shop.camozzi.com

3/2-way valve, G1/8 port, bistable - Mod. 438

These valves can work NC or NO according to the last pilot signal.

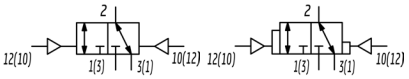

VP02 *VP03*

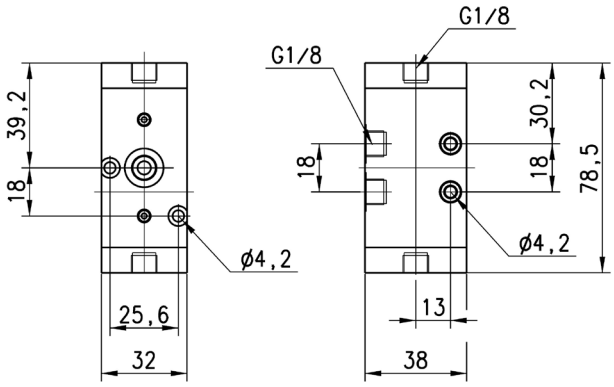

Mod.	Mounting	Function	Flow rate Qn [Nl/min]	Min pilot pressure [bar]	Working pressure [bar]	Symbol
438-33	in-line/on manifold	3/2	700	2	-0,9 ÷ 10	VP02
438-34	in-line/on manifold	3/2	700	2	-0,9 ÷ 10	VP03

5/2-way valve, G1/8 port, bistable - Mod. 458

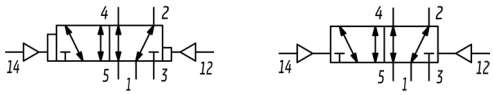

VP05 *VP06*

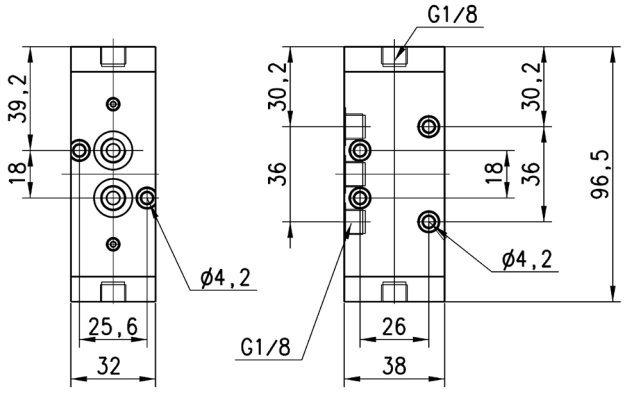

Mod.	Mounting	Function	Flow rate Qn [Nl/min]	Min pilot pressure [bar]	Working pressure [bar]	Symbol
458-33	In-line/on manifold	5/2	700	2	-0,9 ÷ 10	VP06
458-34	In-line/on manifold	5/2	700	2	-0,9 ÷ 10	VP05

3/2-way valve, G1/4 port, monostable - Mod. 434-35

This valve can work NC or NO depending on where the power supply is connected.

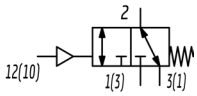

VP01

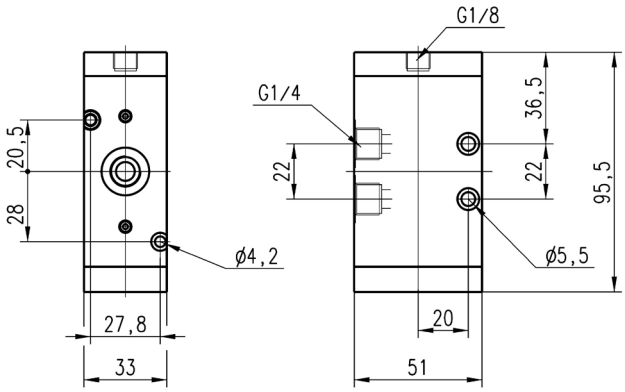

Mod.	Mounting	Function	Flow rate Qn [Nl/min]	Min pilot pressure [bar]	Working pressure [bar]
434-35	in-line/on manifold	3/2 NC	1250	2,5	-0,9 ÷ 10

5/2-way valve, G1/4 port, monostable - Mod. 454-35

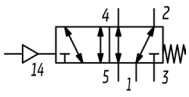

VP04

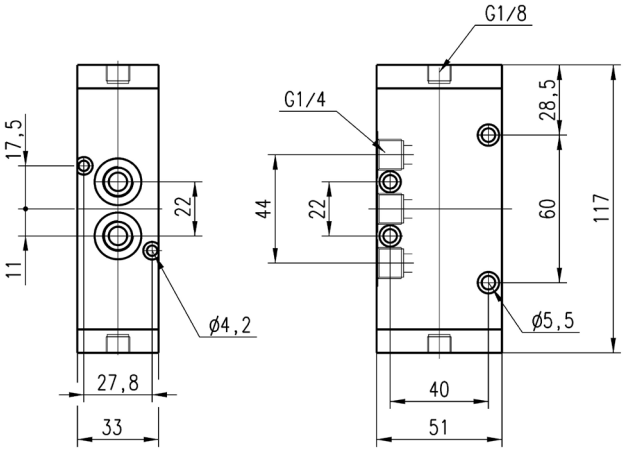

Mod.	Mounting	Function	Flow rate Qn [Nl/min]	Min pilot pressure [bar]	Working pressure [bar]
454-35	In-line/on manifold	5/2	1250	2,5	-0,9 ÷ 10

Products designed for industrial applications. General terms and conditions for sale are available on www.camozzi.com
This document contains a description of the products offered by Camozzi Automation at time of publication.
For more complete and up to date information about the Camozzi Automation product range, please refer to our online catalogue at https://shop.camozzi.com

3/2-way valve, G1/4 port, bistable - Mod. 434

These valves can work NC or NO according to the last pilot signal.

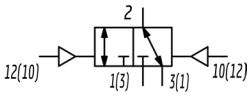

VP02

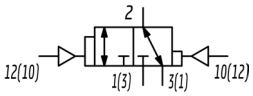

VP03

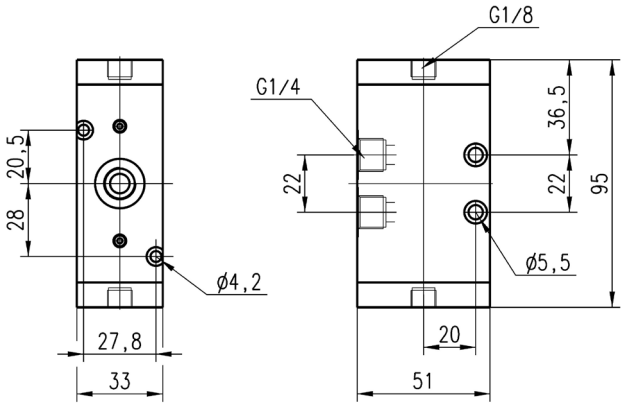

Mod.	Mounting	Function	Flow rate Qn [Nl/min]	Min pilot pressure [bar]	Working pressure [bar]	Symbol
434-33	In-line/on manifold	3/2 NC	1250	2	-0,9 ÷ 10	VP02
434-34	In-line/on manifold	3/2 NC	1250	2	-0,9 ÷ 10	VP03

5/2-way valve, G1/4 port, bistable Mod. 454

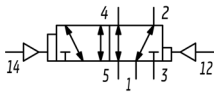

VP05

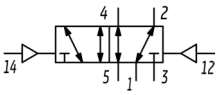

VP06

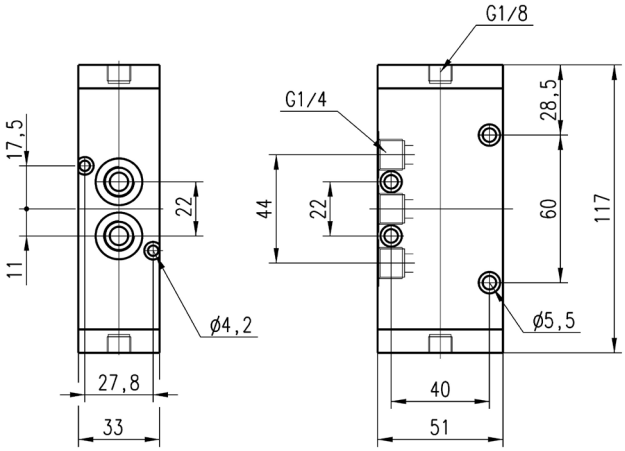

Mod.	Mounting	Function	Flow rate Qn [Nl/min]	Min pilot pressure [bar]	Working pressure [bar]	Symbol
454-33	In-line/on manifold	5/2	1250	2	-0,9 ÷ 10	VP06
454-34	In-line/on manifold	5/2	1250	2	-0,9 ÷ 10	VP05

5/3-way C.C. valve, G1/8, monostable, with central stable position - Mod. 468

CC = Centres Closed

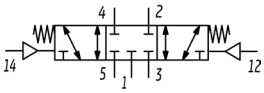

VP08

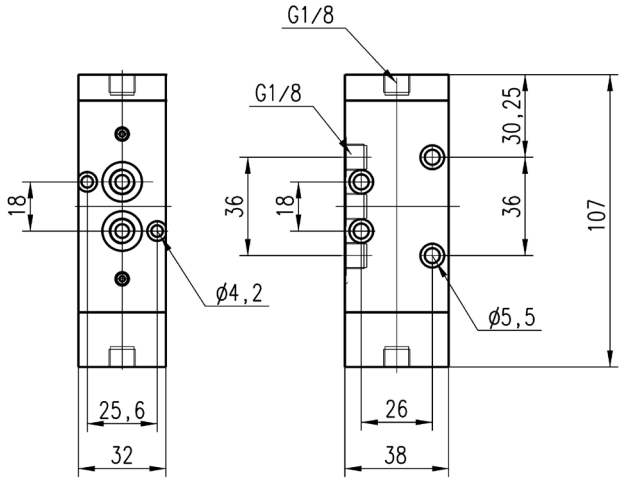

Mod.	Mounting	Function	Flow rate Qn [Nl/min]	Min pilot pressure [bar]	Working pressure [bar]
468-33	In-line/on manifold	5/3 CC	700	2,5	-0,9 ÷ 10

5/3-way CC CO valve, G1/4, monostable, central stable position - Mod. 464-.., 474-..

CC = Centres Closed
CO = Centres Open

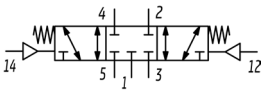

VP08

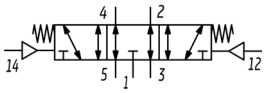

VP09

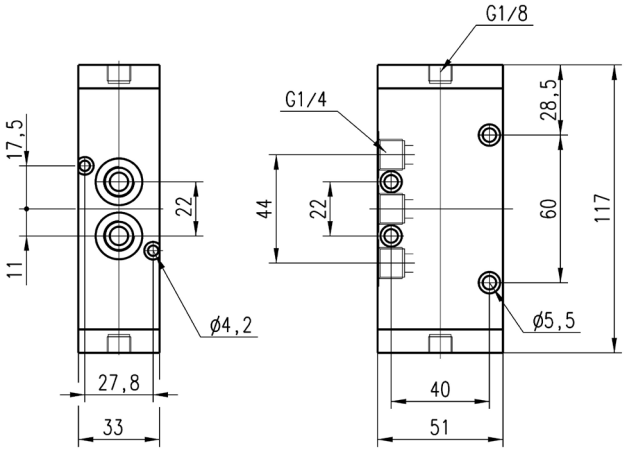

Mod.	Mounting	Function	Flow rate Qn [Nl/min]	Min pilot pressure [bar]	Working pressure [bar]	Symbol
464-33	In-line/on manifold	5/3 CC	1250	2,5	-0,9 ÷ 10	VP08
474-33	In-line/on manifold	5/3 CO	1200	2,5	-0,9 ÷ 10	VP09

Products designed for industrial applications. General terms and conditions for sale are available on www.camozzi.com
This document contains a description of the products offered by Camozzi Automation at time of publication.
For more complete and up to date information about the Camozzi Automation product range, please refer to our online catalogue at https://shop.camozzi.com

3/2-way valve, G3/8 port, monostable - Mod. 433-35

This valve can work NC or NO depending on where the power supply is connected.

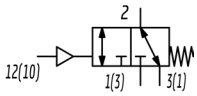

VP01

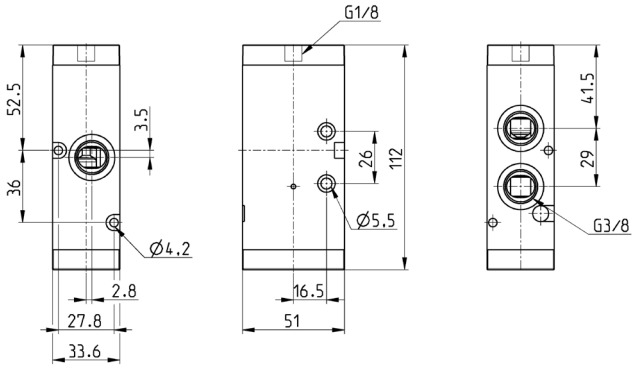

Mod.	Mounting	Function	Flow rate Qn [Nl/min]	Min pilot pressure [bar]	Working pressure [bar]
433-35	In-line/on manifold	3/2 NC	1800	2,5	-0,9 ÷ 10

5/2-way valve, G3/8 port, monostable - Mod. 453-35

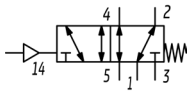

VP04

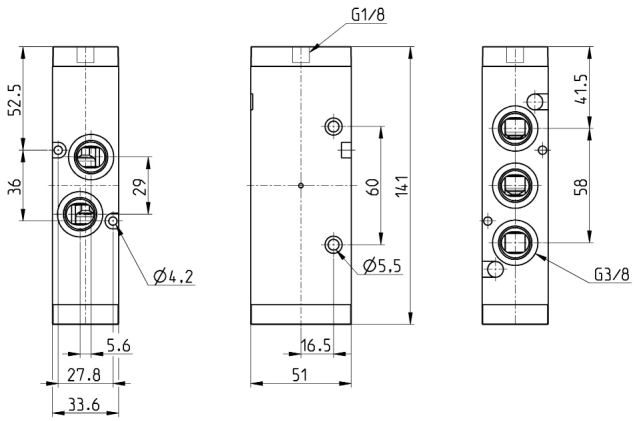

Mod.	Mounting	Function	Flow rate Qn [Nl/min]	Min pilot pressure [bar]	Working pressure [bar]
453-35	In-line/on manifold	5/2	1800	2,5	-0,9 ÷ 10

3/2-way valve, G3/8 port, bistable - Mod. 433

These valves can work NC or NO according to the last pilot signal.

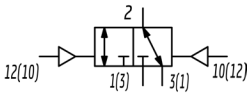

VP02

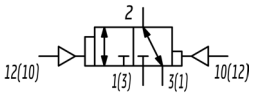

VP03

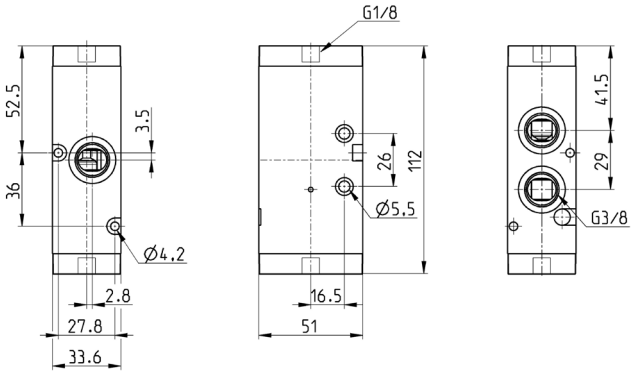

Mod.	Mounting	Function	Flow rate Qn [Nl/min]	Min pilot pressure [bar]	Working pressure [bar]	Symbol
433-33	In-line/on manifold	3/2 NC	1800	2	-0,9 ÷ 10	VP02
433-34	In-line/on manifold	3/2 NC	1800	2	-0,9 ÷ 10	VP03

5/2-way valve, G3/8 port, bistable - Mod. 453

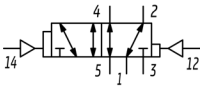

VP05

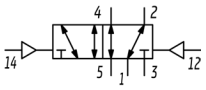

VP06

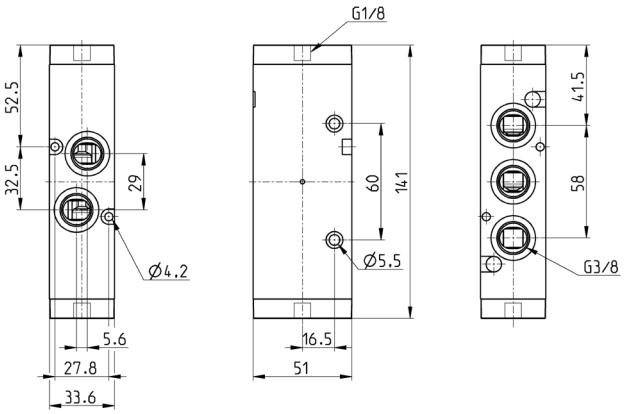

Mod.	Mounting	Function	Flow rate Qn [Nl/min]	Min pilot pressure [bar]	Working pressure [bar]	Symbol
453-33	In-line/on manifold	5/2	1800	2	-0,9 ÷ 10	VP06
453-34	In-line/on manifold	5/2	1800	2	-0,9 ÷ 10	VP05

Products designed for industrial applications. General terms and conditions for sale are available on www.camozzi.com
This document contains a description of the products offered by Camozzi Automation at time of publication.
For more complete and up to date information about the Camozzi Automation product range, please refer to our online catalogue at https://shop.camozzi.com

5/3-way CC CO valve, G3/8, monostable, central stable position - Mod. 463-.., 473-..

CC = Centres Closed
CO = Centres Open

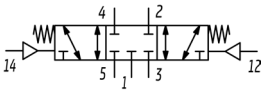

VP08

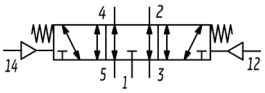

VP09

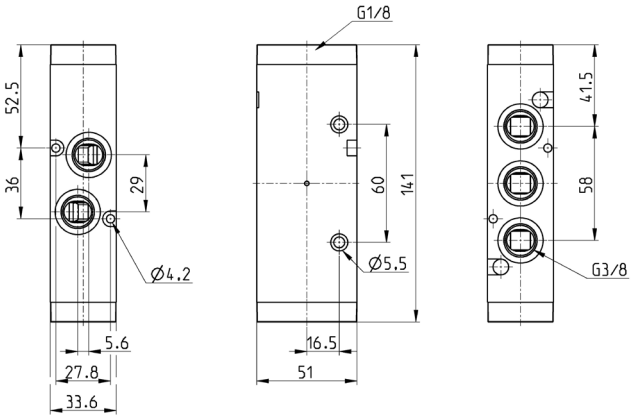

Mod.	Mounting	Function	Flow rate Qn [Nl/min]	Min pilot pressure [bar]	Working pressure [bar]	Symbol
463-33	In-line/on manifold	5/3 CC	1600	2,5	-0,9 ÷ 10	VP08
473-33	In-line/on manifold	5/3 CO	1600	2,5	-0,9 ÷ 10	VP09

5/2-way valve, G1/2 port, monostable - Mod. 452C-35

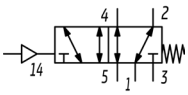

VP04

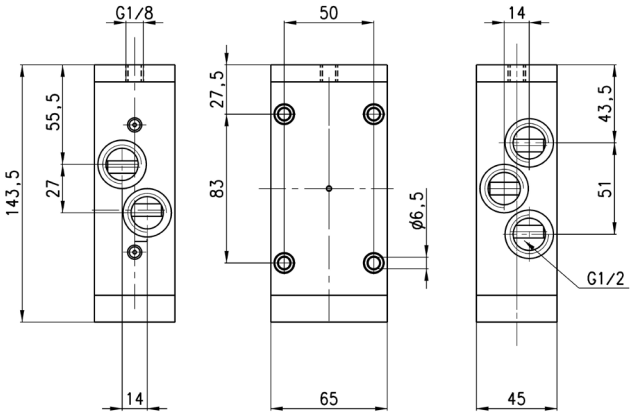

Mod.	Mounting	Function	Flow rate Qn [Nl/min]	Min pilot pressure [bar]	Working pressure [bar]
452C-35	In-line	5/2	2500	2,5	-0,9 ÷ 10

5/2-way valve, G1/2 port, bistable - Mod. 452C

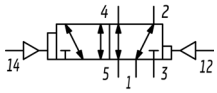

VP05

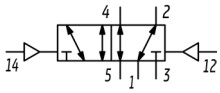

VP06

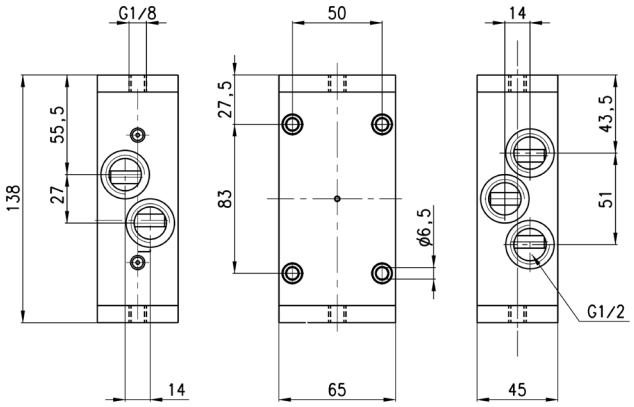

Mod.	Mounting	Function	Flow rate Qn [Nl/min]	Min pilot pressure [bar]	Working pressure [bar]	Symbol
452C-33	In-line	5/2	2500	2	-0,9 ÷ 10	VP06
452C-34	In-line	5/2	2500	2	-0,9 ÷ 10	VP05

5/2-way valve, G1/2 port, monostable - Mod. 452N-35

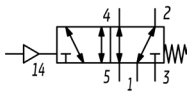

VP04

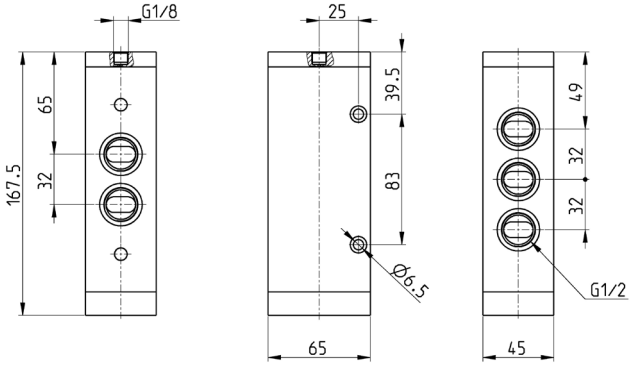

Mod.	Mounting	Function	Flow rate Qn [Nl/min]	Min pilot pressure [bar]	Working pressure [bar]
452N-35	in-line	5/2	4000	2,5	-0,9 ÷ 10

Products designed for industrial applications. General terms and conditions for sale are available on www.camozzi.com
This document contains a description of the products offered by Camozzi Automation at time of publication.
For more complete and up to date information about the Camozzi Automation product range, please refer to our online catalogue at https://shop.camozzi.com

5/2-way valve, G1/2 port, bistable - Mod. 452N-33

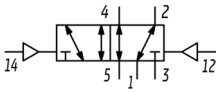

VP06

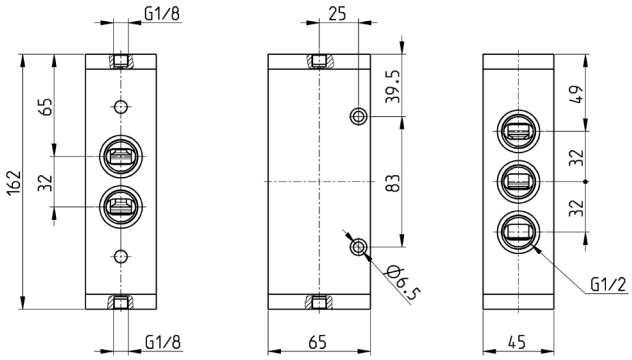

Mod.	Mounting	Function	Flow rate Qn [Nl/min]	Min pilot pressure [bar]	Working pressure [bar]	Symbol
452N-33	In-line	5/2	4000	2	-0,9 ÷ 10	VP06

Manifold base with common exhausts

For valves Series 4, G1/8 (3/2, 5/2 or 5/3-way).

Supplied with:
1x manifold
1x pair of fixing screws for valve position
1x interface seal for valve positions
2x guides for valve position

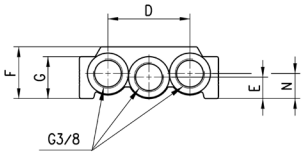

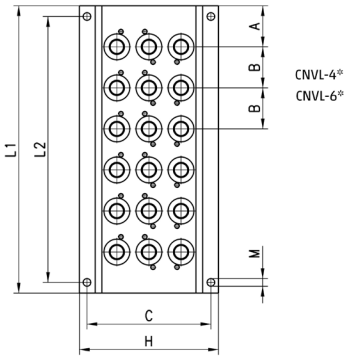

Mod.	A	B	C	D	E	F	G	H	L1	L2	M	N
CNVL-42	28	33	69,2	46	12	29	23,5	78	89	77	4,3	14
CNVL-43	28	33	69,2	46	12	29	23,5	78	122	110	4,3	14
CNVL-44	28	33	69,2	46	12	29	23,5	78	155	143	4,3	14
CNVL-45	28	33	69,2	46	12	29	23,5	78	188	176	4,3	14
CNVL-46	28	33	69,2	46	12	29	23,5	78	221	209	4,3	14

Products designed for industrial applications. General terms and conditions for sale are available on www.camozzi.com
This document contains a description of the products offered by Camozzi Automation at time of publication.
For more complete and up to date information about the Camozzi Automation product range, please refer to our online catalogue at https://shop.camozzi.com

Manifold base with common exhausts

For valves Series 4, G1/4 (3/2, 5/2 or 5/3-way).

La fornitura comprende:
1x manifold
1x pair of fixing screws for valve position
1x interface seal for valve positions
2x guides for valve position

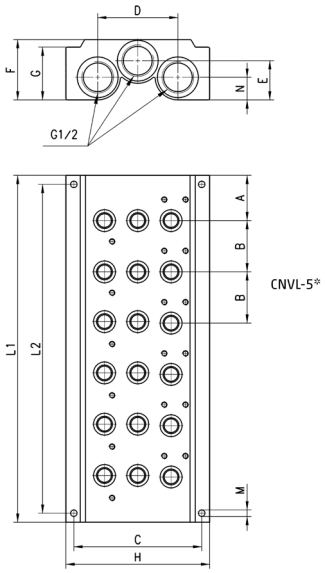

Mod.	A	B	C	D	E	F	G	H	L1	L2	M	N
CNVL-52	30	34	845	53	26	40	35	95	94	82	4,3	15
CNVL-53	30	34	845	53	26	40	35	95	128	116	4,3	15
CNVL-54	30	34	845	53	26	40	35	95	162	150	4,3	15
CNVL-55	30	34	845	53	26	40	35	95	196	184	4,3	15
CNVL-56	30	34	845	53	26	40	35	95	230	218	4,3	15

Manifold base with common exhausts

For valves Series 4, G3/8 (3/2, 5/2 or 5/3-way).

Supplied with:
1x manifold
1x pair of fixing screws for valve position
1x interface seal for valve positions
2x guides for valve position

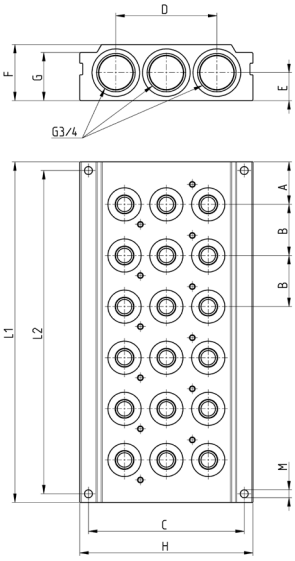

Mod.	A	B	C	D	E	F	G	H	L1	L2	M
CNVL-62	29,5	35	108	70	19,5	39	33,5	120	94,5	82,5	5,5
CNVL-63	29,5	35	108	70	19,5	39	33,5	120	130	118	5,5
CNVL-64	29,5	35	108	70	19,5	39	33,5	120	166	154	5,5
CNVL-65	29,5	35	108	70	19,5	39	33,5	120	201	189	5,5
CNVL-66	29,5	35	108	70	19,5	39	33,5	120	237	225	5,5

Products designed for industrial applications. General terms and conditions for sale are available on www.camozzi.com
This document contains a description of the products offered by Camozzi Automation at time of publication.
For more complete and up to date information about the Camozzi Automation product range, please refer to our online catalogue at https://shop.camozzi.com

Blanking plug Mod. TCNVL for manifolds

Supplied with:
1x blanking plug
1x O-Ring

TCNVL/3: for Series 4, G1/8
TCNVL/5: for Series 4, G1/4
TCNVL/6: for Series 4, G3/8

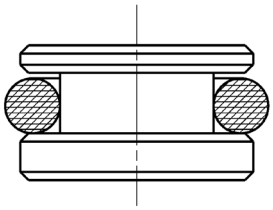

Mod.
TCNVL/3
TCNVL/5
TCNVL/6

Blanking plate Mod. CNVL for manifolds

Supplied with:
2x fixing screws
3x O-Rings

CNVL/2: for Series 4, G1/8
CNVL/3: for Series 4, G1/4
CNVL/6: for Series 4, G3/8

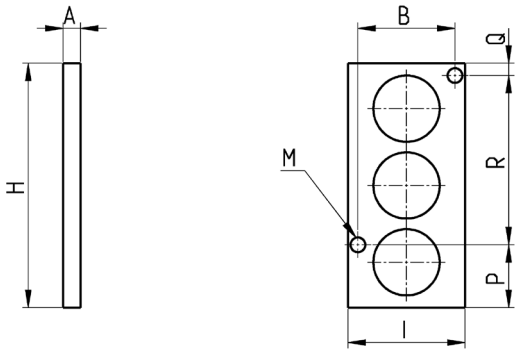

Mod.	A	B	H	I	M	P	Q	R
CNVL/2	5	25,6	52	32	4,2	17	17	18
CNVL/3	5	27,8	70	33,5	4,2	18	3,5	48,5
CNVL/6	5	27,8	85	33,5	4,2	24,5	24,5	36

Solenoids Mod. A8...

Electrical connection: bipolar plus earth
Norm: DIN EN 175 301-803-A

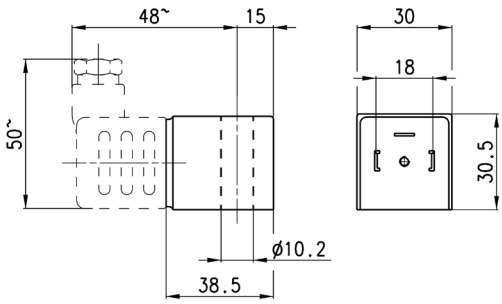

Mod.	Solenoid voltage	Power absorption
A8B	24V - 50/60Hz	5VA
A8D	110V - 50/60Hz	5VA
A8E	220V - 50/60Hz	5VA
A83	24V DC	4W

Products designed for industrial applications. General terms and conditions for sale are available on www.camozzi.com
This document contains a description of the products offered by Camozzi Automation at time of publication.
For more complete and up to date information about the Camozzi Automation product range, please refer to our online catalogue at https://shop.camozzi.com

Solenoids Mod. G8...

Electrical connection: bipolar plus earth
Norm: DIN EN 175 301-803-A

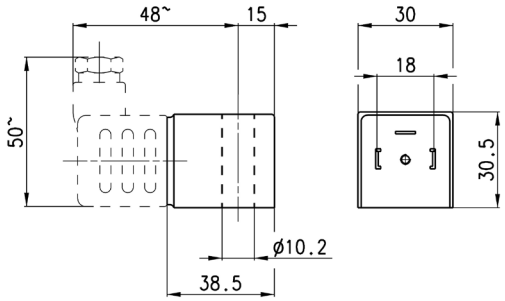

	Solenoid voltage	Power absorption
G83	24V DC	4W

Solenoids Mod. G93 (with latching)

Electrical connection: bipolar plus earth
Norm: DIN EN 175 301-803-B
Voltage tolerance: ± 10%
Pulsed operation (see description)

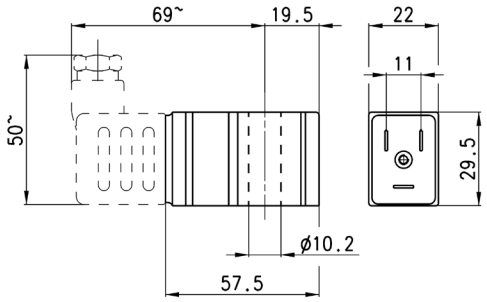

Mod.	Voltage	Minimum inpulse latch/release	Consumption latch/release
G92	12 V DC	18 ms - 10 ms	200 mA - 160 mA
G93	24 V DC	18 ms - 10 ms	100 mA - 80 mA

Solenoid Mod. H8... for potentially explosive ambients

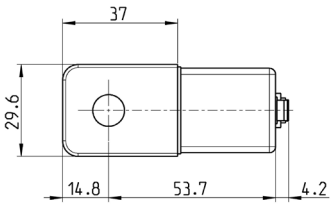

Certification in compliance with EN 60079-0 EN 60079-18
ATEX:
II 2G Ex mb IIC T4 Gb
II 2D Ex mb IIIC T135°C Db
I M2 Ex mb I Mb
INERIS 06ATEX0002X

IECEx:
Ex mb IIC T4 Gb
Ex mb IIIC T135°C Db
Ex mb I Mb
IECEx INE 15.0053X

For Series NA use plate mod. NA54- PC.

Temperature class/Max surface temperature: T4/135°C.
Environment temperature: -20°C + 40°C.
Connection: tripolar cable 3 m (other lenghts on request).
Incapsulating material: self-extinguishing PA.

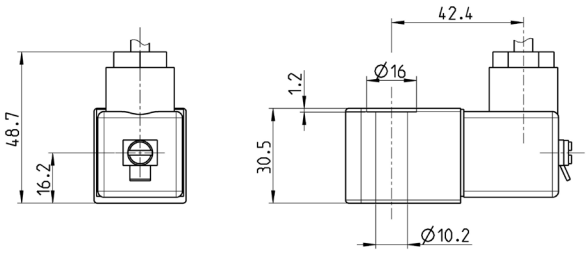

Mod.	Solenoid voltage	Power absorption
H83I	24 V - DC	5,3 W
H8BI	24 V - 50/60 Hz	5,3 W
H8CI	48 V - 50/60 Hz	5,3 W
H8DI	110 V - 50/60 Hz	5,3 W
H8EI	230 V - 50/60 Hz	5,3 W

Products designed for industrial applications. General terms and conditions for sale are available on www.camozzi.com
This document contains a description of the products offered by Camozzi Automation at time of publication.
For more complete and up to date information about the Camozzi Automation product range, please refer to our online catalogue at https://shop.camozzi.com

Solenoids Mod. U7... / U7*EX and Mod. G7...

Electrical connection: bipolar plus earth
Norm: DIN EN 175 301-803-B
Solenoid material: U7* = PET; G7* = PA
To order the ATEX version of Mod. U7 (not available for Mod. U7F, U7K1 with voltage 125V 50/60Hz) it is necessary to add EX at the end of the code.
Mod. U7*EX marked:
II 3G Ex nA IIC T4 Gc X IP65
II 3D Ex tc IIIC 130°C Dc X

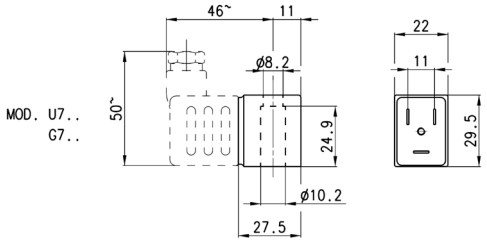

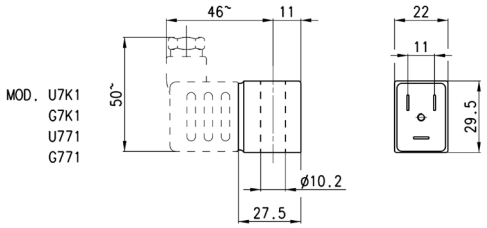

Mod.	Sol. volt. (1)	Pow. abs. (1)	Sol. volt. (2)	Pow. abs. (2)	Sol. volt. (3)	Pow. abs. (3)
U7H	12 V DC	3,1 W	24V - 50/60 Hz	3,5 VA		
G7H	12 V DC	3,1 W	24V - 50/60Hz	3,5 VA		
U7K	110V - 50/60Hz	3,8 VA	125V - 50/60Hz	5,5 VA	72 V DC	4,8 W
U7K1	110V - 50/60Hz	5,8 VA	125V - 50/60Hz	8,3 VA	72 V DC	5,6 W
G7K	110V - 50/60Hz	3,8 VA	125V - 50/60Hz	5,5 VA	72 V DC	4,8 W
G7K1	110V - 50/60Hz	5,8 VA	125V - 50/60Hz	8,3 VA	72 V DC	5,6 W
U7J	230V - 50/60Hz	3,5 VA	240V - 50/60Hz	4 VA		
G7J	230V - 50/60Hz	3,5 VA	240V - 50/60Hz	4 VA		
U79	48 V DC	3,1 W				
G79	48 V DC	3,1 W				
U710	110 V DC	3,2 W				
G710	110 V DC	3,2 W				
U77	24 V DC	3,1 W	48V - 50/60Hz	3,8 VA		
U771	24 V DC	3,1 W	48V - 50/60Hz	3,8 VA		
G77	24 V DC	3,1 W	48V - 50/60Hz	3,8 VA		
G771	24 V DC	3,1 W	48V - 50/60Hz	3,8 VA		
U7F	380V - 50/60Hz	7 VA				
U72	12 V DC	5 W				
G72	12 V DC	5 W				
U73	24 V DC	5 W				
G73	24 V DC	5 W				
U75	24 V DC	2,2 W				

Sol. volt. = Solenoid voltage
Pow. abs. = Power absorption
Mod. U7K1, G7K1, U771 and G771 are to be used only with sol. valves series A, NO in line.

Series 6 solenoid valve - 3/2-way NC - Mod. 600

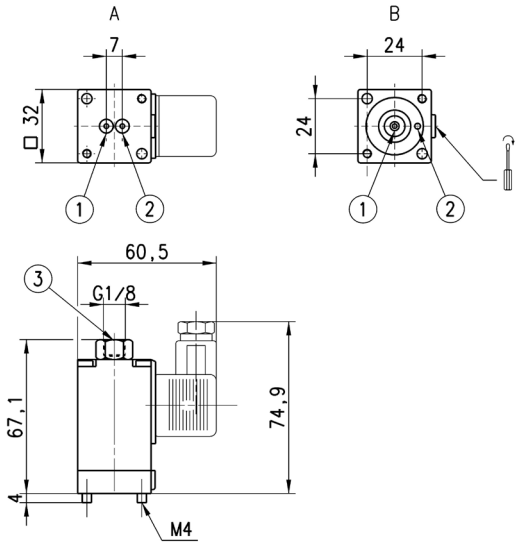

These solenoid valves are equipped with an override and are available with two types of interface:
A = fixed interface
B = rotatable interface

Mod.	Interface	Orifice Ø [mm]	Kv [l/min]	Qn [Nl/min]	Pressure min-max [bar]
600-450-A6*	rotatable	2	1,6	106	0 ÷ 10

*VOLTAGE - POWER CONSUMPTION
B = 24 V 50/60 Hz - 12 VA
C = 48 V 50/60 Hz - 12 VA
D = 110 V 50/60 Hz - 12 VA
E = 230 V 50/60 Hz - 12 VA
2 = 12 V DC - 10 W
3 = 24 V DC - 10 W
4 = 48 V DC - 10 W
5 = 72 V DC - 10 W
6 = 110 V DC - 10 W
8 = 160 V DC - 10 W

Products designed for industrial applications. General terms and conditions for sale are available on www.camozzi.com
This document contains a description of the products offered by Camozzi Automation at time of publication.
For more complete and up to date information about the Camozzi Automation product range, please refer to our online catalogue at https://shop.camozzi.com